FläktGroup

AIRTREND Ltd
Predstavništvo u Beogradu
Kumanovska 14, 11000 Beograd
Tel: 011/3836886, 3085740
Faks: 011/3444113
e-mail: gobrid@eunet.rs
web: www.airtrend.rs

CHILLED BEAM CASSETTE IQ STAR LYRA

TECHNICAL CATALOGUE

IQ STAR LYRA CHILLED BEAM CASSETTE

The LYRA chilled beam cassette is a compact chilled beam for ventilation, cooling and heating. It provides comfort with low air velocities in the room by mixing the supply air with the ambient air. LYRA diffuses air in 4 directions. This gives a high cooling effect. It is available with comfort control - FläktGroup adjustable induction-and flow pattern control. These two features give high flexibility.

LYRA is equipped with Coanda Safety Control. This function is necessary if a low air flow setting is used, to guarantee an optimal indoor climate. LYRA can also be supplied with integrated control to offer a plug and play system.

QUICK SELECTION

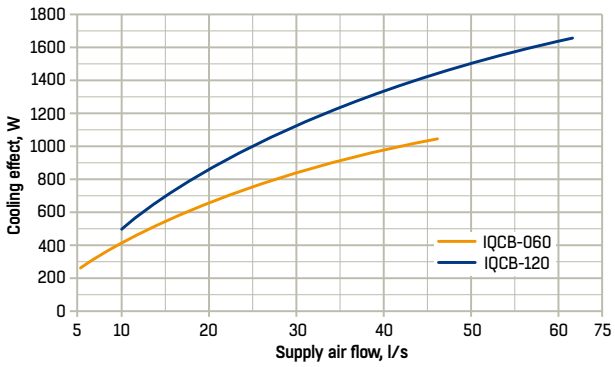

The diagram shows the approximate cooling power P_{tot} in W with water flow q_w = 0.05 l/s, temperature difference between room air and supply air Δt = 8 °C. Temperature difference between mean water temperature and room temperature, Δt = 8 °C. Total air pressure drop 70 Pa.

KEY FEATURES

- Ventilation
- Heating and cooling
- Compact chilled beam
- Adjustable induction
- Flow Pattern Control
- Integrated control

SPECIFICATIONS

- Compact chilled beams for installation flush into false ceiling or suspended from soffit
- 2 or 4 pipes coil for cooling or cooling and heating
- Equipped with Comfort Control that provides individually adjustable airflow in four directions enabling for each side asymmetric throw
- Flow pattern control to adjust the diffusion angle in each side
- Available in two lengths, 600 mm and 1200 mm
- Low noise level
- Integrated control for a simple installation

PRODUCT CODE EXAMPLE

Cassette chilled beam IQCB-060-12-1-01-0.

CONSTRUCTION AND FUNCTIONS

CONSTRUCTION

The LYRA chilled beam cassette is designed for installation in false ceilings, and its dimensions fit a 600 mm false ceiling module.

This regards both its length and height, which means that the product must be installed completely flush with the ceiling. If the LYRA chilled beam cassette is equipped with the accessory IQAZ-33, it can be freely suspended from the ceiling.

The LYRA chilled beam cassette is equipped with comfort control and has control equipment as an accessory. This combination provides high flexibility for dimensioning the indoor climate. The air flow can be adjusted with levers (comfort control) by changing the number of open nozzles in the air duct. This is easily done during commissioning. The adjustable nozzles offer a choice of air distribution options (1-way, 2-way, 3-way and 4-way).

This easy adjustment of air distribution and capacity makes it easy to adapt the system to changing conditions. On delivery, the standard beam has the maximum number of nozzles open as default (nozzle 3). The LYRA chilled beam cassette is equipped with Coanda Safety Control (CSC). It can be varied between high effect mode (front in lowest position) and normal effect mode (front in highest position). CSC should be used with low air flows to ensure that the air stream adheres to the ceiling. High effect mode is obtained when the front is in the lowest position. This mode should not be used below 50 Pa.

MATERIAL AND SURFACE FINISH

The casing mainly consists of galvanized steel sheet. The front panel has a white powder-coated finish. Standard colour RAL 9003, equivalent to NCS 0500-N, gloss level 30.

Coil in copper with connector Øy = 15 mm and aluminium fins. Max. working pressure 1.6 MPa.

INSTRUCTIONS

Instructions for installation, adjustment and maintenance are delivered with each product. Instructions can also be accessed via Select.

TECHNICAL DATA AND DIMENSIONS

For full dimension data, use FläktGroup product selection program Select. For further information, contact our nearest sales office. Web address, Select http://select.flaktwoods.com/

COMFORT CONTROL

LYRA is available with 5 different air flow settings: low, medium, high, boost and fixed boost.

Air flow in l/s at 70 Pa	60 x 60	60 x 120
Low airflow	4 - 12	8 - 21
Medium airflow	6 - 17	11 - 29
High airflow	8 - 22	14 - 35
Boost airflow, Ø125, with CC	25 - 39	38 - 52
Boost airflow, Ø160, with CC	–	52 - 67
Fixed boost flow, Ø125	39	–
Fixed boost airflow, Ø160	–	61

To achieve optimal air distribution into the room, and full flexibility, tool free air flow adjustment is available for each side. Levers located at each side enables fast and simple air flow adjustment without the need for additional tools.

From shut off position, low, medium and high setting are available with 3 nozzle positions, boost setting with

4 nozzle positions and fixed boost setting fixed to 1 position.

Fixed boost setting requires no nozzle adjustment and offers higher airflows at quieter noise levels.

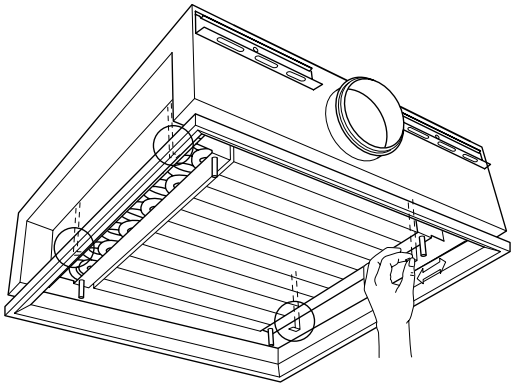

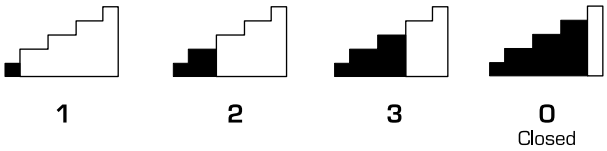

Tool free nozzle settings for LYRA - low, medium and high airflow.

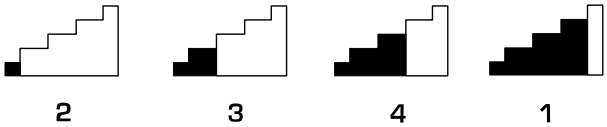

Tool free nozzle settings for LYRA - boost airflow.

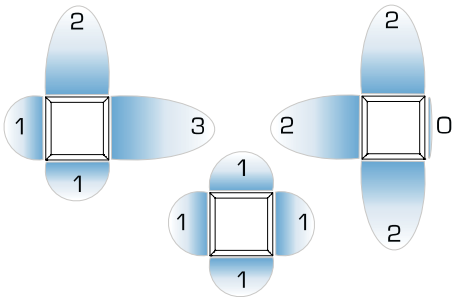

Airflow with different nozzle settings.

FLOW PATTERN CONTROL (FPC), COANDA SAFETY CONTROL (CSC)

FLOW PATTERN CONTROL - FPC

The FPC (Flow Pattern Control) is a function that makes LYRA highly flexible. It is the FPC function combined with comfort control that gives LYRA its unique characteristics. FläktGroup FPC function allows the air flow to be directed at different angles. It is very easy to adjust and change the air flow direction.

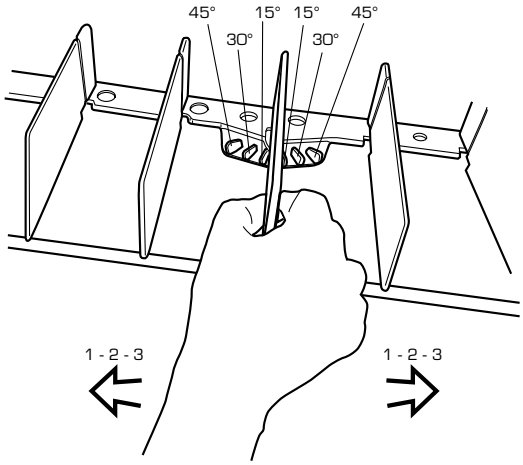

The image below shows an installation where air direction is set to 30 ° in two directions and the airflow is set with comfort controls to the same nozzle on each side of a size 120. This installation options provide an efficient and comfortable air throughout the room.

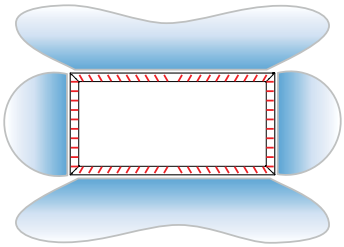

The image below shows an installation where a high airflow is needed. Comfort control is still set to the same nozzle at each side, but the flaps set to 30 ° in the direction of two neighboring beams.

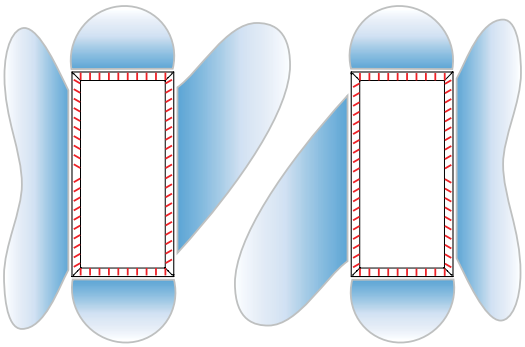

COANDA SAFETY CONTROL (CSC), FREELY SUSPENDED

COANDA SAFETY CONTROL (CSC)

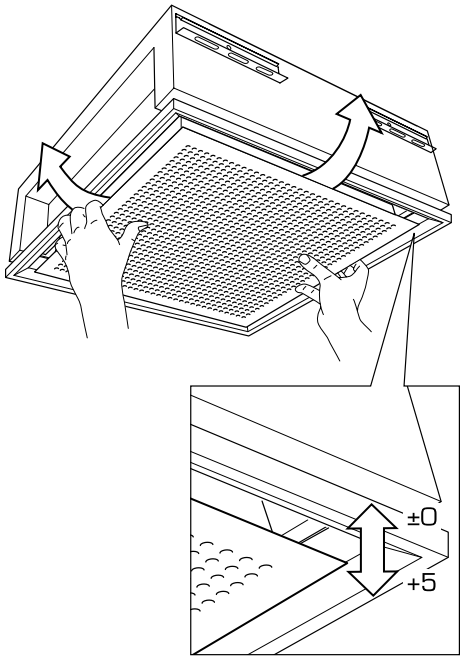

Coanda Safety Control (CSC) is a function that maintains the Coanda effect (adhesion of the air to the ceiling) while simultaneously ensuring the highest possible cooling power. This is done by adjusting the position of the front panel.

At low flows and pressures, it may be necessary to adjust the front panel to its highest position to keep the coanda effect.

At high flows and pressure, the Coanda effect is easily maintained, so the front panel can be set in its lowest position, which increases the cooling and heating power by approximately 5-10%.

To adjust the front panel, pull or push it so that it snaps into position.

FREELY SUSPENDED

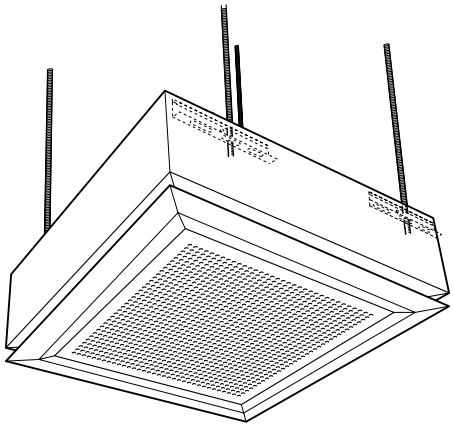

LYRA can be adapted for freely suspended installation. This is done by ordering the accessory IQAZ-33, which consists of a

SUSPENSION, INSTALLATION

casing and a front plate adapter. This accessory is fitted on the cassette while the cassette is suspended from the ceiling.
In the freely suspended version, the air outlet is specially designed to direct the air flow slightly upwards. This reduces the air velocity in the occupied zone and ensures that air from the room mixes with the chilled air before it reaches the occupied zone. Directing the air upwards also creates the Coanda effect without needing to rely on nearby surfaces.

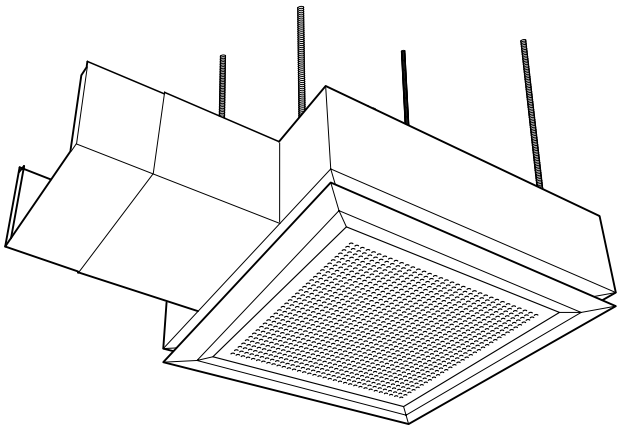

A duct enclosure for concealing water pipes and air ducts to the cassette unit is also available as an accessory with three ranges of size:
• 30 to 50 cm
• 50 to 90 cm
• 90 to 170 cm

SUSPENSION OF THE CHILLED BEAM

INSTALLATION WITH FASTENING BRACKET QFAZ-18

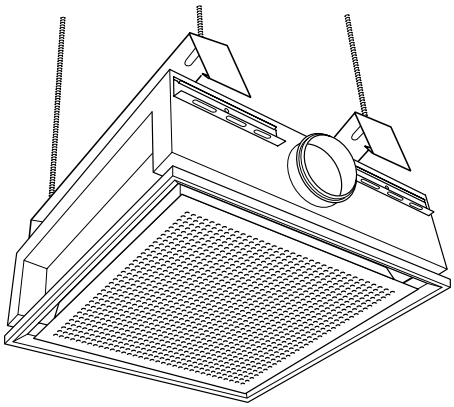

A suspension bracket facilitates the suspension of chilled beams from the ceiling. Two brackets are used for each beam. The brackets can be ordered in advance or along with the chilled beam. The suspension brackets can be fitted directly to the ceiling or onto channel support bars. The chilled beam is simply attached by pressing it against the bracket until it clicks into place. No tools are needed. After this, the chilled beam can be adjusted lengthwise by sliding the bracket along the beam's fastening points. To adjust it sideways, slide the threaded bars along the grooves in the bracket.

INSTALLATION OF CHILLED BEAM WITH WIRE QFAZ-23-01-01

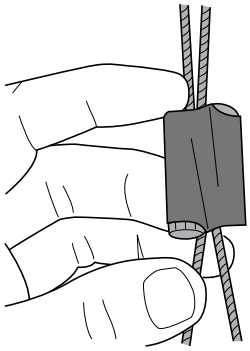

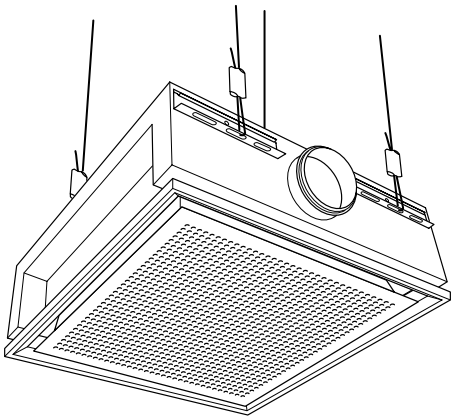

The chilled beam cassette can also be suspended with wires. In this case, the beam's height is easily adjusted with a stepless fastening device. This type of installation is suitable for metal or concrete ceilings. Alternately, a wire can simply be wound round a bar in the ceiling. A special concrete fastener for concrete ceilings is included in every kit.

With the lock system it is easy to adjust the height installation of the chilled beam.

INTEGRATED CONTROL

LYRA is available with integrated control by ordering the accessory STRZ-75. The room controller can be positioned in three different locations depending on the desired level of accessibility. Actuators and valves are fixed on LYRA in factory. It is delivered with push–on connections. A very simple operation allows the installer to connect it with no risk of leakage. The valves are factory wired. Lyra integrated control offers Modbus or Bacnet communication as standard.

IN OPTION

- Condensation sensor mounted and wired
- Specific connection unit dedicated to IPSUM

From the room controller, it is possible to make the commissioning, increase and decrease temperature and display main information (see STRA-24 catalogue for detailed information)

ROOM CONTROLLER ON SIDE

The room controller is factory mounted on the short side of LYRA and wired. This configuration uses an external temperature sensor installed below the coil. Temperature and condensation (in option) sensor are factory wired.

ROOM CONTROLLER ON FRONT PLATE

The room controller is factory mounted on the front plate of LYRA and wired. This configuration uses the temperature sensor built into the room controller. Condensation sensor (in option) is factory wired.
The controller has 2 postions to be always flush with the front plate (when coanda safety control function is used).

LOOSE DELIVERED ROOM CONTROLLER

The room controller is loose delivered. This configuration used the temperature sensor built into the room controller. A 5m cable is pre-wired to the room controller. On site, installer needs to connect this cable to the connection unit placed on the side of LYRA. Condensation sensor (in option) is factory wired.

TECHNICAL DATA FOR COOLING

TABLE 1: LYRA-060 - LOW AIRFLOW, Ø125 MM

Nozzle	Pressure, Pa	q_{air} l/s	P_{tot}, in W for Δt, °C 6	8	10	P_{coil}, in W for Δt, °C 6	8	10	L_{A10} dB(A)
1	70	4.1	168	208	248	119	159	199	<20
2	70	7.8	272	332	391	179	238	298	<20
3	70	12.5	380	457	534	230	307	384	<20
1	100	5.3	211	260	309	147	196	245	<20
2	100	9.5	329	400	472	215	286	358	<20
3	100	14.9	455	547	639	276	368	460	<20

TABLE 2: LYRA-060 - MEDIUM AIRFLOW, Ø125 MM

Nozzle	Pressure, Pa	q_{air} l/s	P_{tot}, in W for Δt, °C 6	8	10	P_{coil}, in W for Δt, °C 6	8	10	L_{A10} dB(A)
1	70	5.9	210	256	302	139	185	231	<20
2	70	10.8	343	414	485	213	284	355	<20
3	70	17.4	477	567	656	269	358	448	<20
1	100	7.3	256	313	369	169	225	281	<20
2	100	12.9	408	493	577	254	338	423	<20
3	100	20.7	561	665	770	313	417	521	<20

TABLE 3: LYRA-060 - HIGH AIRFLOW, Ø125 MM

Nozzle	Pressure, Pa	q_{air} l/s	P_{tot}, in W for Δt, °C 6	8	10	P_{coil}, in W for Δt, °C 6	8	10	L_{A10} dB(A)
1	70	8.2	262	316	371	164	218	273	<20
2	70	14.2	417	499	582	247	329	411	<20
3	70	22.1	548	642	736	283	377	471	<20
1	100	10.2	321	387	454	199	265	331	<20
2	100	16.9	493	590	687	290	387	484	<20
3	100	26.3	649	760	871	333	444	555	22

TABLE 4: LYRA-060 - BOOST AIRFLOW, Ø125 MM

Nozzle	Pressure, Pa	q_{air} l/s	P_{tot}, in W for Δt, °C 6	8	10	P_{coil}, in W for Δt, °C 6	8	10	L_{A10} dB(A)
1	70	25.2	499	564	630	196.5	262	327	25
2	70	30.3	613	697	780	250	333	416	26
3	70	34.5	704	801	898	290	387	484	28
4	70	39.4	781	884	986	308	411	514	30
1	100	30.1	593	670	747	232	309	386	31
2	100	36.1	736	837	938	303	404	505	32
3	100	41.0	844	961	1078	352	469	586	34
4	100	46.7	949	1078	1208	388	518	647	36

TABLE 5: LYRA-060 - FIXED BOOST AIRFLOW, Ø125 MM

Nozzle	Pressure, Pa	q_{air} l/s	P_{tot}, in W for Δt, °C 6	8	10	P_{coil}, in W for Δt, °C 6	8	10	L_{A10} dB(A)
70	39	783	889	994	317	422	528	28	<20
100	46	921	1043	1166	367	489	611	34	<20

LYRA-060 = Water flow = 0.05 l/s, Pressure drop, Δp_w = 5,0 kPa

TABLE 6: LYRA-120 - LOW AIRFLOW, Ø125 MM

Nozzle	Pressure, Pa	q_{air} l/s	P_{tot}, in W for Δt, °C 6	8	10	P_{coil}, in W for Δt, °C 6	8	10	L_{A10} dB(A)
1	70	8.2	282	409	438	233	311	389	<20
2	70	14.0	439	629	670	346	461	576	<20
3	70	20.9	587	834	879	437	583	729	<20
1	100	10.0	348	499	537	284	379	474	<20
2	100	16.8	530	757	808	416	555	694	<20
3	100	24.9	699	993	1046	521	694	868	<20

TABLE 7: LYRA-120 - MEDIUM AIRFLOW, Ø125 MM

Nozzle	Pressure, Pa	q_{air} l/s	P_{tot}, in W for Δt, °C 6	8	10	P_{coil}, in W for Δt, °C 6	8	10	L_{A10} dB(A)
1	70	10.9	330	477	503	260	346	433	<20
2	70	19.3	540	779	813	410	547	684	<20
3	70	28.7	711	1014	1046	503	670	838	<20
1	100	13.2	401	576	610	314	418	523	<20
2	100	23.0	649	935	979	494	659	824	<20
3	100	34.2	838	1196	1231	590	786	983	23

TABLE 8: LYRA-120 - HIGH AIRFLOW, Ø125 MM

Nozzle	Pressure, Pa	q_{air} l/s	P_{tot}, in W for Δt, °C 6	8	10	P_{coil}, in W for Δt, °C 6	8	10	L_{A10} dB(A)
1	70	14.4	417	598	630	319	425	531	<20
2	70	24.1	647	925	965	477	636	795	<20
3	70	35.3	826	1172	1200	561	748	935	22
1	100	17.4	509	724	766	386	515	644	<20
2	100	28.8	766	1097	1142	563	751	939	<20
3	100	42.1	972	1380	1409	656	875	1094	28

TABLE 9: LYRA-060 - BOOST AIRFLOW, Ø125 MM

Nozzle	Pressure, Pa	q_{air} l/s	P_{tot}, in W for Δt, °C 6	8	10	P_{coil}, in W for Δt, °C 6	8	10	L_{A10} dB(A)
1	70	38	815	935	1055	359	479	598	27
2	70	43.1	967	1117	1267	450	600	750	31
3	70	47.2	1073	1242	1411	507	676	845	33
4	70	51.7	1154	1332	1510	534	712	890	35
1	100	45.3	990	1139	1287	446	595	744	33
2	100	51.3	1171	1357	1542	556	741	926	36
3	100	56.2	1300	1509	1718	656	835	1044	38
4	100	61.5	1405	1628	1850	667	890	1112	40

TABLE 10: LYRA-060 - BOOST AIRFLOW, Ø160 MM

Nozzle	Pressure, Pa	q_{air} l/s	P_{tot}, in W for Δt, °C 6	8	10	P_{coil}, in W for Δt, °C 6	8	10	L_{A10} dB(A)
1	70	52.4	1015	1144	1272	386	515	644	34
2	70	57.4	1157	1314	1470	468	625	781	35
3	70	61.9	1258	1430	1601	515	687	859	35
4	70	67.5	1334	1509	1683	524	699	874	37
1	100	62.5	1229	1389	1548	479	639	799	39
2	100	68.4	1398	1591	1783	577	770	962	40
3	100	73.7	1547	1767	1988	662	883	1103	41
4	100	80.4	1699	1944	2188	734	979	1224	41

TABLE 11: LYRA-120 - FIXED BOOST AIRFLOW, Ø160 MM

Pressure, Pa	q_{air} l/s	P_{tot}, in W for Δt, °C 6	8	10	P_{coil}, in W for Δt, °C 6	8	10	L_{A10} dB(A)
70	60.6	614	1546	1024	614	819	1024	28
100	72.1	701	1799	2033	701	934	1168	34

LYRA-120 = Water flow = 0.05 l/s, Pressure drop, Δp_w = 9,0 kPa

TECHNICAL DATA FOR HEATING

TABLE 12: LYRA-060 - LOW AIRFLOW, Ø125 MM

Nozzle	Pressure, Pa	q_{air} l/s	$P_{coil\ heat}$, in W for Δt, °C 10	15	20	L_{A10} dB(A)
1	70	4.1	168	208	248	<20
2	70	7.8	272	332	391	<20
3	70	12.5	380	457	534	<20
1	100	5.3	211	260	309	<20
2	100	9.5	329	400	472	<20
3	100	14.9	455	547	639	<20

TABLE 13: LYRA-060 - MEDIUM AIRFLOW, Ø125 MM

Nozzle	Pressure, Pa	q_{air} l/s	$P_{coil\ heat}$, in W for Δt, °C 10	15	20	L_{A10} dB(A)
1	70	5.9	169	254	338	<20
2	70	10.7	234	351	468	<20
3	70	17.2	278	417	556	<20
1	100	7.3	199	299	398	<20
2	100	12.8	266	399	532	<20
3	100	20.5	312	468	624	<20

TABLE 14: LYRA-060 - HIGH AIRFLOW, Ø125 MM

Nozzle	Pressure, Pa	q_{air} l/s	$P_{coil\ heat}$, in W for Δt, °C 10	15	20	L_{A10} dB(A)
1	70	8.2	262	316	371	<20
2	70	14.2	417	499	582	<20
3	70	22.1	548	642	736	<20
1	100	10.2	321	387	454	<20
2	100	16.9	493	590	687	<20
3	100	26.3	649	760	871	22

TABLE 15: LYRA-060 - BOOST AIRFLOW, Ø125 MM

Nozzle	Pressure, Pa	q_{air} l/s	$P_{coil\ heat}$, in W for Δt, °C 10	15	20	L_{A10} dB(A)
1	70	25.2	196.5	262	327	25
2	70	30.3	250	333	416	26
3	70	34.5	290	387	484	28
4	70	39.4	308	411	514	30
1	100	30.1	232	309	386	31
2	100	36.1	303	404	505	32
3	100	41.0	352	469	586	34
4	100	46.7	388	518	647	36

TABLE 16: LYRA-060 - FIXED BOOST AIRFLOW, Ø125 MM

Nozzle	Pressure, Pa	q_{air} l/s	$P_{coil\ heat}$, in W for Δt, °C 10	15	20	L_{A10} dB(A)
70	39	783	422	528	28	<20
100	46	921	489	611	34	<20

LYRA-060 = Water flow = 0.05 l/s, Pressure drop, Δp_w = 6,0 kPa

TABLE 17: LYRA-120 - LOW AIRFLOW, Ø125 MM

Nozzle	Pressure, Pa	q_{air} l/s	$P_{coil\ heat}$, in W for Δt, °C 10	15	20	L_{A10} dB(A)
1	70	8.2	292	438	584	<20
2	70	14.0	401	602	802	<20
3	70	20.9	490	735	980	<20
1	100	10.0	342	513	684	<20
2	100	17.8	461	692	922	<20
3	100	24.9	572	858	1144	<20

TABLE 18: LYRA-120 - MEDIUM AIRFLOW, Ø125 MM

Nozzle	Pressure, Pa	q_{air} l/s	$P_{coil\ heat}$, in W for Δt, °C 10	15	20	L_{A10} dB(A)
1	70	10.9	331	497	662	<20
2	70	19.3	468	702	936	<20
3	70	28.7	570	855	1140	<20
1	100	13.2	385	578	770	<20
2	100	23.0	541	812	1082	<20
3	100	34.2	646	969	1292	23

TABLE 19: LYRA-120 - HIGH AIRFLOW, Ø125 MM

Nozzle	Pressure, Pa	q_{air} l/s	$P_{coil\ heat}$, in W for Δt, °C 10	15	20	L_{A10} dB(A)
1	70	14.4	394	591	788	<20
2	70	24.1	530	795	1060	<20
3	70	35.3	621	932	1242	22
1	100	17.4	460	690	920	<20
2	100	28.8	621	932	1242	<20
3	100	42.1	714	1071	1428	28

TABLE 20: LYRA-060 - BOOST AIRFLOW, Ø125 MM

Nozzle	Pressure, Pa	q_{air} l/s	$P_{coil\ heat}$, in W for Δt, °C 10	15	20	L_{A10} dB(A)
1	70	38	461	691	921	27
2	70	43.1	534	801	1068	31
3	70	47.2	588	883	1177	33
4	70	51.7	610	915	1220	35
1	100	45.3	548	822	1096	33
2	100	51.3	633	950	1267	36
3	100	56.2	679	1018	1357	38
4	100	61.5	649	974	1299	40

TABLE 21: LYRA-060 - BOOST AIRFLOW, Ø160 MM

Nozzle	Pressure, Pa	q_{air} l/s	$P_{coil\ heat}$, in W for Δt, °C 10	15	20	L_{A10} dB(A)
1	70	52.4	463	694	925	34
2	70	57.4	539	809	1079	35
3	70	61.9	569	854	1139	35
4	70	67.5	531	796	1061	37
1	100	62.5	563	845	1127	39
2	100	68.4	661	991	1321	40
3	100	73.7	739	1108	1477	41
4	100	80.4	829	1243	1657	41

TABLE22: LYRA-120 - FIXED BOOST AIRFLOW, Ø160 MM

Pressure, Pa	q_{air} l/s	$P_{coil\ heat}$, in W for Δt, °C 10	15	20	L_{A10} dB(A)
70	60.6	641	962	1282	28
100	72.1	727	1091	1454	34

LYRA-120 = Water flow = 0.05 l/s, Pressure drop, Δp_w = 10,0 kPa

TECHNICAL AND SOUND DATA

CONDITIONS FOR COOLING PERFORMANCE TABLES

Total cooling effect of beam , P_{tot} = cooling effect of coil, P_{coil} + cooling effect of supply air, P_{air}.

- Air side total pressure drop of 70 Pa.
- Water flow rate of 0.05 l/s per circuit.
- Δt = 8 °C between room temperature and mean water temperature.
- Δt = 8 °C between room temperature and supply air temperature.

Performance for water flows other than 0.05 l/s can be found in the FläktGroup product selection tool, Select (select.flaktgroup.com).

The cooling power of the supply air is based on the supply air being 10 °C cooler than the ambient air.

The indicated power for water are based on the CSC (Coanda Safety Control) function in high capacity setup mode. The effects for other water flows are indicated in FläktGroup's product selection program Select. Contact our nearest sales office for further information.

The tables on this page are based on tests performed according to EN 15116. The method is used to compare different chilled beams under equivalent conditions, and does not permit any difference in temperature between the supply air to the beam's coil and the air 1.1 m above the floor (seated head height)..

At low air flows, the CSC function should be set to its highest position (Normal capacity setup) for optimal air flow characteristics.

DEFINITIONS

q_l	Supply airflow, l/s
P_{tot}	Total cooling effect, W
P_{coil}	Cooling effect of the coil, W
$P_{coil\ heat}$	Heating effect of the coil, W
Δt	Difference between room air temperature and average water temperature, °C
Δp_w	Pressure drop water, kPa
Δt_w	(°C) = P_{batt} (W) / 208
Δt_w	(US imperial) - Δt_w (°F) = P batt (BTU/tim) / 81177
L_{A10}	Sound pressure level in a room with 10 m² room absorption, dB(A)

SOUND POWER LEVEL

LYRA	Correction K_{oct} dB Octave band, mid-frequency, Hz							
	63	125	250	500	1000	2000	4000	8000
60	4	–6	–2	–1	1	–3	–10	–16
120	4	–3	–3	–1	1	–3	–10	–17
Tol +/-	6	3	2	2	2	2	2	3

The sound power levels for every octave band are obtained by adding together the sound pressure level L_{A10} , dB(A), and the corrections K_{oct} given in the table above, according to the following formula:

$$L_W = L_{A10} + K_{oct}$$

Correction K_{oct} äis the average in the area of application of the chilled beam.

SOUND ATTENUATION

The average sound attenuation ΔL of the LYRA chilled beam cassette from duct to room includes damping the connecting duct's opening when the product is installed on the ceiling.

LYRA II	Sound attenuation in supply duct for the beam ΔL, dB Octave band, mid-frequency, Hz							
	63	125	250	500	1000	2000	4000	8000
60	19	7	6	8	4	10	12	4
120	19	7	6	7	9	11	13	5
Tol +/-	6	3	2	2	2	2	2	3

CORRECTION OF COOLING CAPACITY FOR OTHER WATER FLOW THAN 0.05 l/s

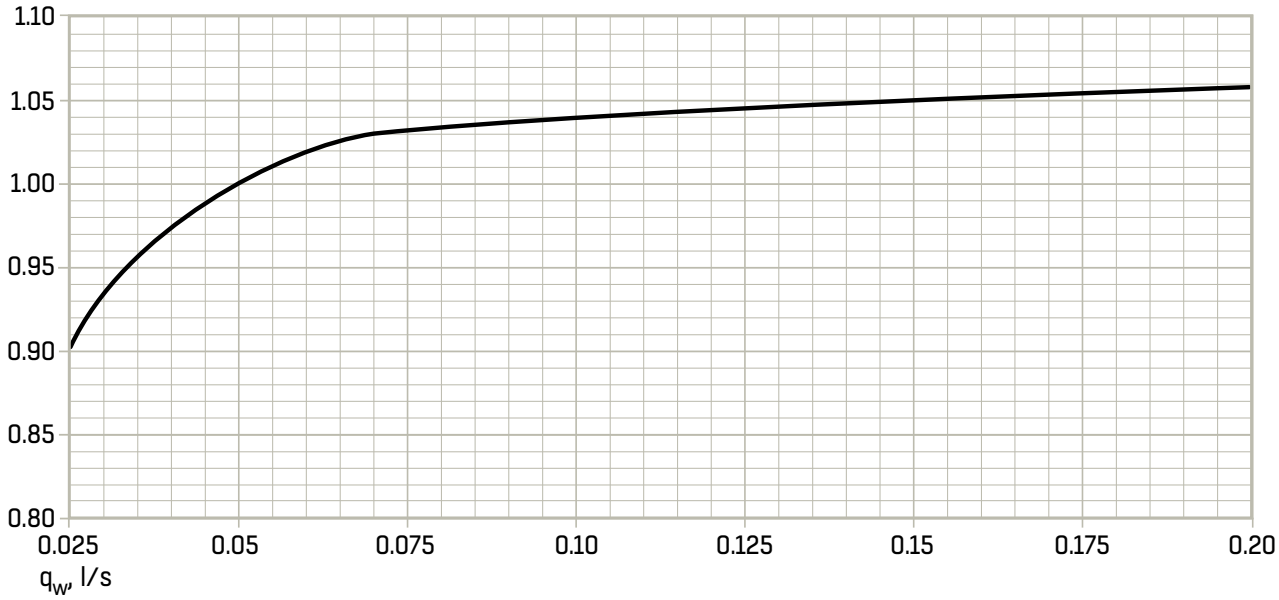

PRESSURE DROP Δp – WATER COOLING

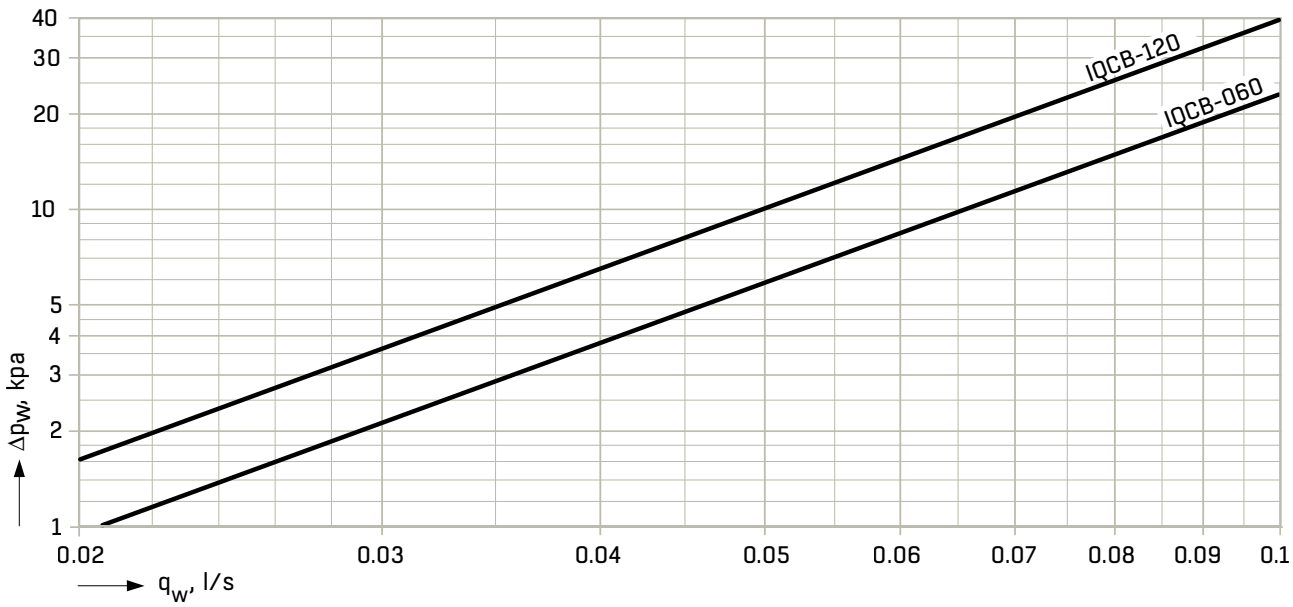

P_{tot} = cooling power air + coil
P_{coil} = cooling power coil

DIMENSIONS AND WEIGHTS

LYRA-060, RECESSED VERSION

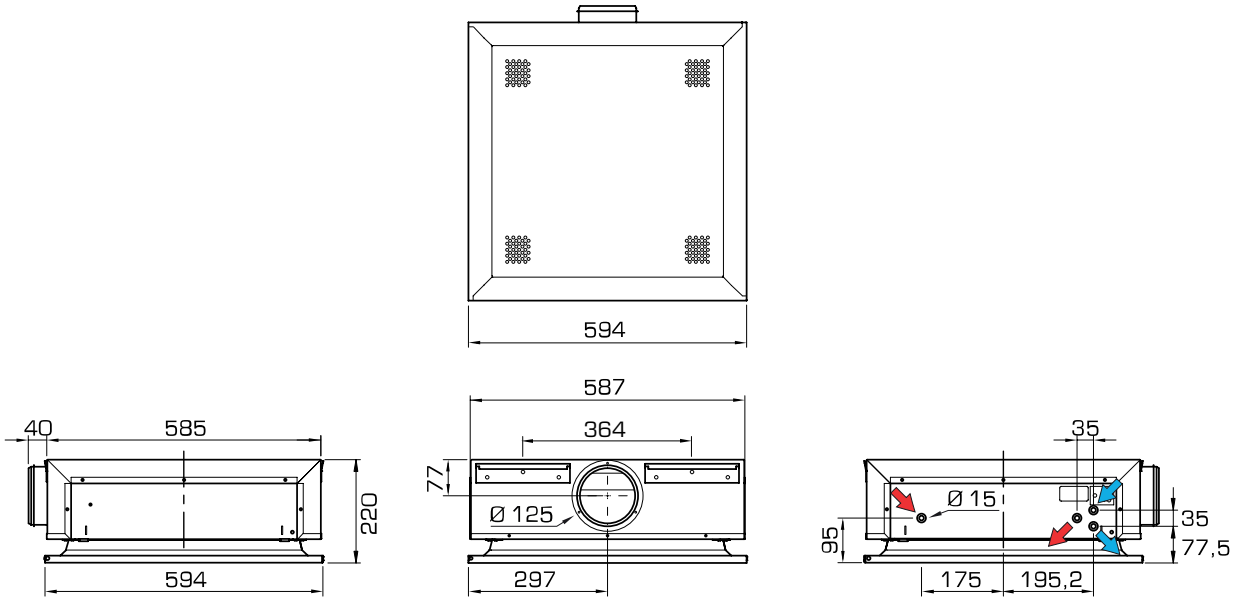

Delivery weight: 16 kg
Operating weight: 17 kg (incl. cooling water)
18 kg (incl. cooling and heating water)

= Cooling water in
= Cooling water out
= Heating water in
= Heating water out

LYRA-060 FREELY SUSPENDED

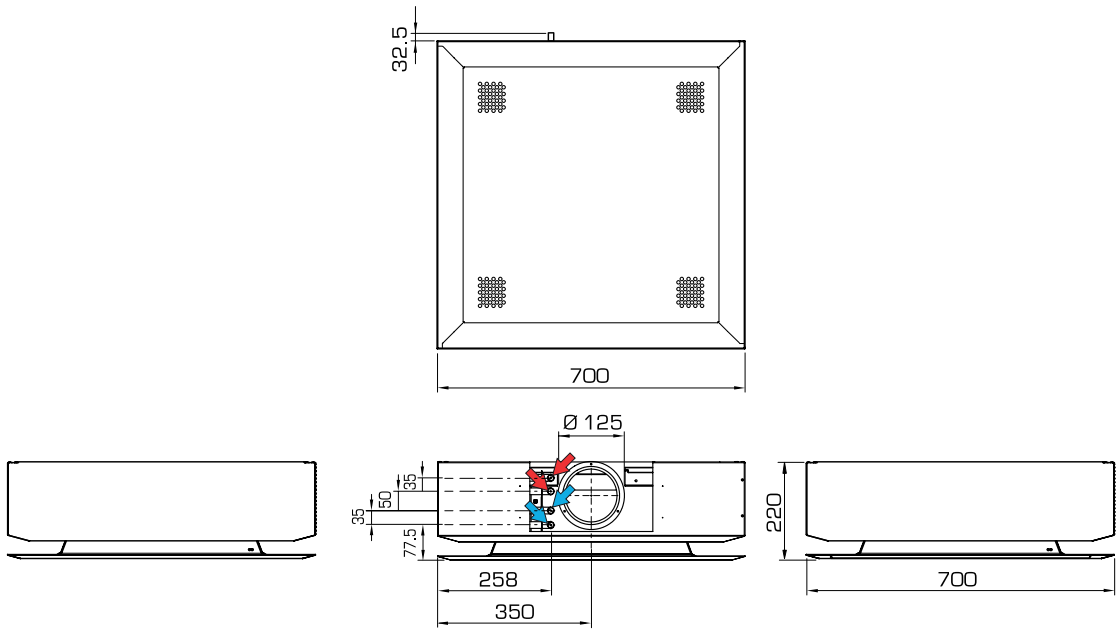

Delivery weight: 18 kg
Operating weight: 19 kg (incl. cooling water)
20 kg (incl. cooling and heating water)

= Cooling water in
= Cooling water out
= Heating water in
= Heating water out

LYRA-120, RECESSED VERSION

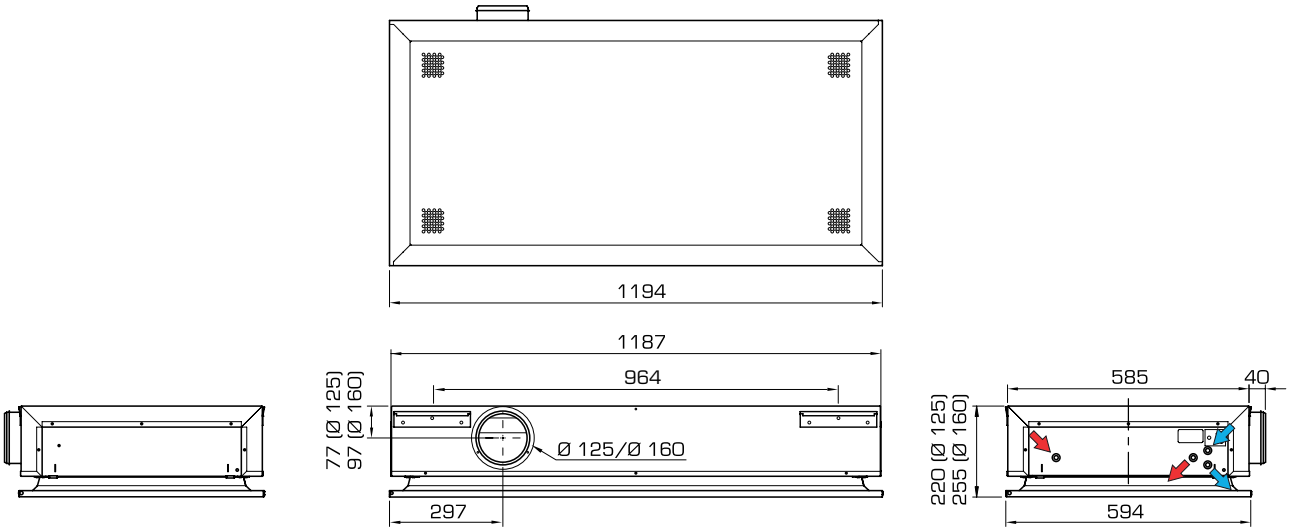

Delivery weight: 29 kg
Operating weight: 30 kg (incl. cooling water)
32 kg (incl. cooling and heating water)

= Cooling water in
= Cooling water out
= Heating water in
= Heating water out

LYRA-120 FREELY SUSPENDED

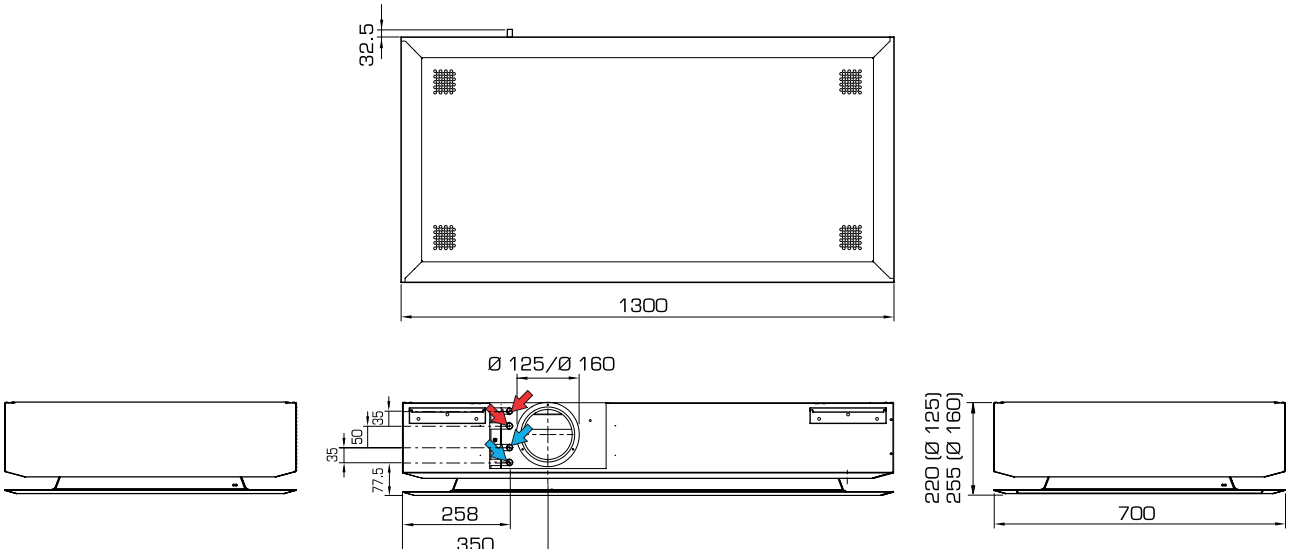

Delivery weight: 31 kg
Operating weight: 33 kg (incl. cooling water)
34 kg (incl. cooling and heating water)

= Cooling water in
= Cooling water out
= Heating water in
= Heating water out

LYRA-060, LOW-BUILT

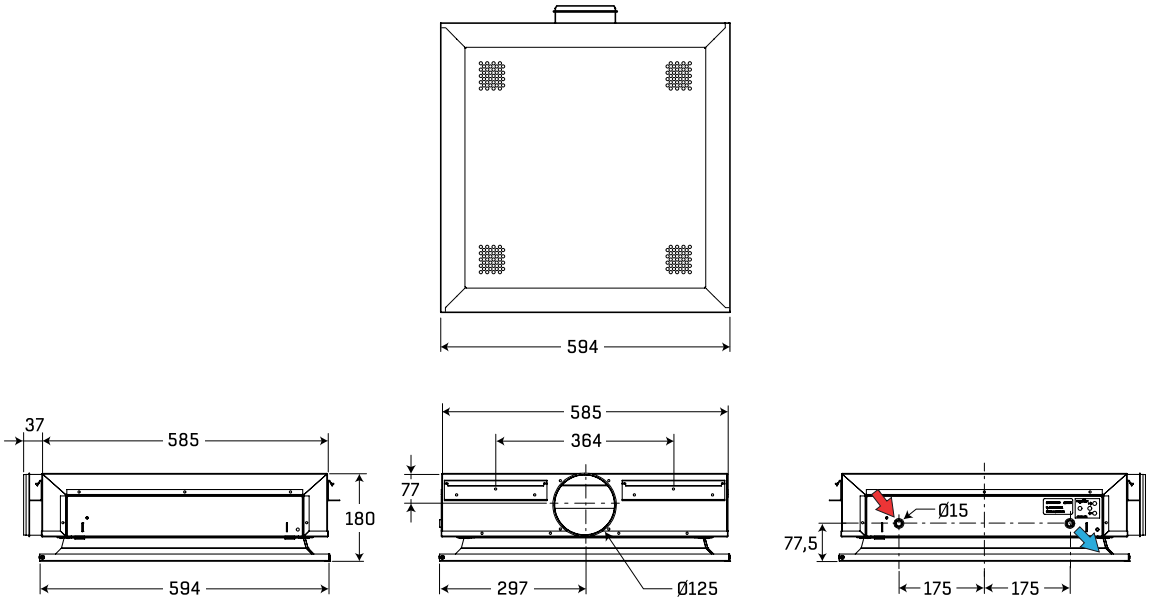

Delivery weight: 14 kg
Operating weight: 15 kg (incl. cooling water)

= Cooling water in
= Cooling water out
= Heating water in
= Heating water out

LYRA-120 LOW-BUILT

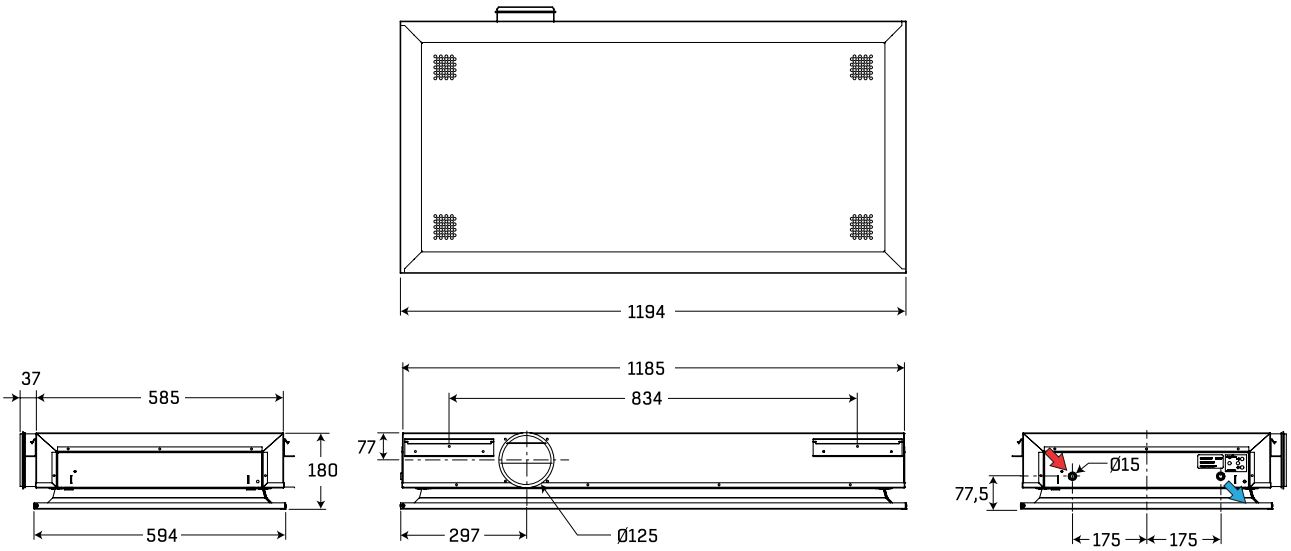

Delivery weight: 25 kg
Operating weight: 26 kg (incl. cooling water)

= Cooling water in
= Cooling water out
= Heating water in
= Heating water out

Figure 8: Purging nipple

PRODUCT CODE AND ACCESSORIES

Cassette chilled beam **IQCB-aaa-bb-c-dd-e**

Nominal length (aaa)
060 = 60 cm
120 = 120 cm

Connections (bb)
12 = Water to the left of air
72 = Low-built

aaa = 060 aaa = 120

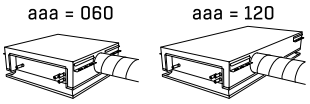

14 = Water to the right of air
74 = Low-built

aaa = 060 aaa = 120

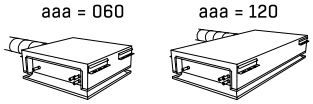

16 = 2 spigots (alternative connection)
76 = Low-built

aaa = 060 aaa = 120

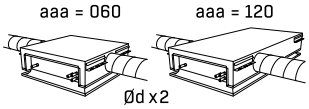

Water near air connections

Coil (c)
1 = Cooling
2 = Cooling and heating (only bb = 12, 14, 16)

Comfort Control (dd)
02 = Low airflow, with CC, Ø125, FPC
04 = Medium airflow, With CC, Ø125, FPC
06 = High airflow, With CC, Ø125, FPC
14 = Fixed boost airflow, Without CC, Ø125, FPC (only aaa = 060, bb = 12, 14, 16)
16 = Fixed boost airflow, Without CC, Ø160, FPC (only aaa = 120, bb = 12, 14, 16)
18 = Boost airflow, With CC, Ø125, FPC
20 = Boost airflow, With CC, Ø160, FPC (only aaa = 120, bb = 12, 14, 16)

Suspension alternatives (e)
0 = For installation in false ceiling
1 = For exposed installation (only bb = 12, 14, 16)

ACCESSORIES

Casing freely suspended **IQAZ-33-bbb-c-ddd**
(only for bb = 12 in IQCB)

Size (bbb)
060 = 60 cm
120 = 120 cm

Execution (c)
1 = Cooling, Ø125
2 = Cooling and heating, Ø 125
3 = Cooling, Ø160 (only aaa = 120)
4 = Cooling and heating, Ø160 (only aaa = 120)

Duct enclosure (ddd)
000 = without
050 = 30-50 cm
090 = 50-90 cm
170 = 90-170 cm

Gripple (suspension system with wire) **QFAZ-23-01-01**
Complete set for one chilled beam cassette
4 wires, 4 concrete fasteners

Fastening bracket **QFAZ-18-7-1**
Set of two, for one chilled beam cassette

Suspension rods M8 **QFAZ-12**
Set of two, length 500 mm.
Two sets QFAZ-12 per cassette

Purging nipple **IQAZ-32-15-0**

Integrated control **STRZ-75-bb-cc-d-e**

Location Room controller (bb)
01 = Loose delivered Room Controler
02 = Room controler mounted on shortside
03 = Room controler in frontplate

Sensors, valves and actuators (cc)
01 = Cooling valve
02 = Cooling valve with condensate sensor
03 = Cooling valve and heating valve
04 = Cooling valve, heating valve and condensate sensor

Connection (d)
1 = Connection terminal
2 = Connection unit - IPSUM

Chilled beam (e)
1 = LYRA 060
2 = LYRA 120

FläktGroup®

EXCELLENCE IN SOLUTIONS

FläktGroup is the European market leader for smart and energy efficient Indoor Air and Critical Air solutions to support every application area. We offer our customers innovative technologies, high quality and outstanding performance supported by more than a century of accumulated industry experience. The widest product range in the market, and strong market presence in 65 countries worldwide, guarantee that we are always by your side, ready to deliver Excellence in Solutions.

PRODUCT FUNCTIONS BY FLÄKTGROUP

Air Treatment | Air Movement | Air Diffusion | Air Distribution | Air Filtration
Air Management & ATD's | Air Conditioning & Heating | Controls | Service

*» Learn more on **www.flaktgroup.com***
or contact one of our offices